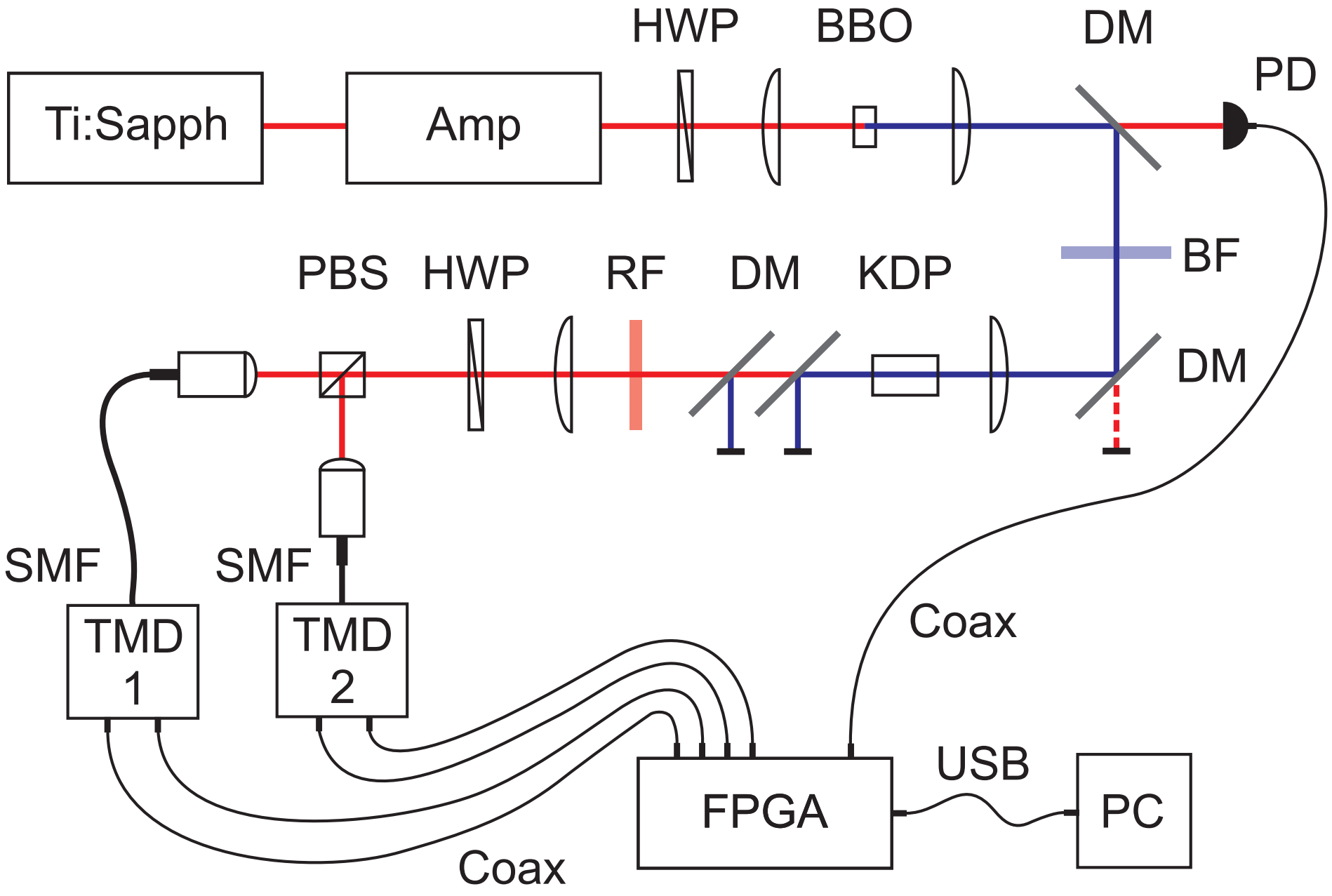
HWP
BBO
DM
PD
Ti:Sapph
Amp
BF
PBS
HWP
RF
DM
KDP
DM
SMF
SMF
TMD 1
TMD 2
Coax
USB
FPGA
PC
Coax